DEAN®

GF14 and GF40 Series

Gas Fryers

Installation, Operation and Maintenance Manual

This manual is updated as new information and models are released. Visit our website for the latest manual.

⚠ CAUTION

READ THE INSTRUCTIONS BEFORE USING THE FRYER.

Read these instructions for use carefully to familiarize yourself with the appliance before connecting it to its gas supply.

Keep these instructions for future reference.

FOR YOUR SAFETY

Do Not Store or use gasoline or other flammable vapors and liquids in the vicinity of this or any other appliance.

8 1 9 5 8 8 7 H

Part Number: FRY_IOM_8195887H 04/2026

Original Instructions

Ali GROUP

WELBILT an Ali Group Company

NOTICE

IF, DURING THE WARRANTY PERIOD, THE CUSTOMER USES A PART FOR THIS FRYMASTER DEAN EQUIPMENT OTHER THAN AN UNMODIFIED NEW OR RECYCLED PART PURCHASED DIRECTLY FROM FRYMASTER DEAN, OR ANY OF ITS AUTHORIZED SERVICERS, AND/OR THE PART BEING USED IS MODIFIED FROM ITS ORIGINAL CONFIGURATION, THIS WARRANTY WILL BE VOID. FURTHER, FRYMASTER DEAN AND ITS AFFILIATES WILL NOT BE LIABLE FOR ANY CLAIMS, DAMAGES OR EXPENSES INCURRED BY THE CUSTOMER WHICH ARISE DIRECTLY OR INDIRECTLY, IN WHOLE OR IN PART, DUE TO THE INSTALLATION OF ANY MODIFIED PART AND/OR PART RECEIVED FROM AN UNAUTHORIZED SERVICER.

NOTICE

This appliance is intended for professional use only and is to be operated by qualified personnel only. A Frymaster Factory Authorized Servicer (FAS) or other qualified professional should perform installation, maintenance, and repairs. Installation, maintenance, or repairs by unqualified personnel may void the manufacturer's warranty. See Chapter 1 of this manual for definitions of qualified personnel.

NOTICE

This equipment must be installed in accordance with the appropriate national and local codes of the country and/or region in which the appliance is installed. For the United States and Canada these are the National Fuel Gas Code, ANSI Z233.1/NFPA 54, or the Natural Gas and Propane Installation Code, CSA B149.1. See NATIONAL CODE REQUIREMENTS in Chapter 2 of this manual for specifics.

The gas manifold of this appliance or of the battery of which it is a part must be connected to a gas appliance pressure regulator adjusted for the manifold pressure marked on the rating plate.

The appliance and its individual shutoff valve must be disconnected from the gas supply piping system during any pressure testing of that system at test pressures in excess of ½ psi (3.5 kPa/13.84 inches W.C.).

The appliance must be isolated from the gas supply piping system by closing its individual manual shutoff valve during any pressure testing of the gas supply piping system at test pressures equal to or less than ½ psi (3.5 kPa/13.84 inches W.C.).

NOTICE TO U.S. CUSTOMERS

This equipment is to be installed in compliance with the basic plumbing code of the Building Officials and Code Administrators International, Inc. (BOCA) and the Food Service Sanitation Manual of the U.S. Food and Drug Administration.

DANGER

Instructions to be followed in the event the operator smells gas or otherwise detects a gas leak must be posted in a prominent location. This information can be obtained from the local gas company or gas supplier.

WARNING

Improper installation, adjustment, maintenance or service, and unauthorized alterations or modifications can cause property damage, injury, or death. Read the installation, operating, and service instructions thoroughly before installing or servicing this equipment. Only qualified service personnel may convert this appliance to use a gas other than that for which it was originally configured.

FOR YOUR SAFETY

Do not store or use gasoline or other flammable liquids or vapors in the vicinity of this or any other appliance.

DANGER

No structural material on the fryer should be altered or removed to accommodate placement of the fryer under a hood. Questions? Call the Frymaster Dean Service Hotline at 1-800-551-8633.

WARNING

After installation of a gas fryer and after any maintenance to the gas system of a gas fryer-manifold, valve, burners, etc. – check for gas leaks at all connections. Apply a thick soapy solution to all connections and ensure there are no bubbles. There should be no smell of gas.

NOTICE

Drawings and photos used in this manual are intended to illustrate operational, cleaning and technical procedures and may not conform to onsite management operational procedures.

NOTICE

The Commonwealth of Massachusetts requires any and all gas products to be installed by a licensed plumber or pipe fitter.

DANGER

Adequate means must be provided to limit the movement of the appliance without depending upon the gas line connector and the quick-disconnect device or its associated piping to limit the appliance movement.

All fryers equipped with casters must be stabilized by installing restraining chains. If a flexible gas line is used, an additional restraining cable must be connected at all times when the fryer is in use.

All fryers equipped with casters must be installed using a connector that complies with the Standard for Connectors for Moveable Gas Appliances, ANSI Z21.69 or CSA 6.16, and a quick-disconnect device that complies with the Standard for Quick-Disconnect Devices for Use with Gas Fuel, ANSI Z21.41 or CSA 6.9.

NOTICE

No warranty is provided for any Frymaster fryer used in a mobile or marine installation or concession. Warranty protection is only offered for fryers installed in accordance with the procedures described in this manual. Mobile, marine or concession conditions of this fryer should be avoided to ensure optimum performance.

DANGER

The front ledge of the fryer is not a step! Do not stand on the fryer. Serious injury can result from slips or contact with the hot oil.

DANGER

Do not spray aerosols in the vicinity of this appliance while it is in operation.

DANGER

When installed, this appliance must conform with local codes, or in the absence of local codes, with the National Fuel Gas Code, ANSI Z223.1/NFPA54, or the Natural Gas and Propane Installation Code, CSA B149.1 as applicable or the appropriate national code of the country in which installed.

NOTICE

This appliance is intended to be used for commercial applications, for example in kitchens of restaurants, canteens, hospitals and in commercial enterprises such as bakeries, butcheries, etc., but not for continuous mass production of food.

NOTICE

The appliance must be installed and used in such a way that any water cannot contact the fat or oil.

WARNING

Use caution and wear appropriate safety equipment to avoid contact with hot oil or surfaces that may cause severe burns or injury.

WARNING

Do not block the area around the base or under the fryers.

WARNING

This appliance is not intended for use by children under the age of 16 or persons with reduced physical, sensory or mental capabilities, or lack of experience and knowledge, unless they have been given supervision concerning use of the appliance by a person responsible for their safety. Do not allow children to play with this appliance.

WARNING

Operation, installation, and servicing of this product may expose you to chemicals/products including [Bisphenol A (BPA), glass wool or ceramic fibers, and crystalline silica], which is [are] known to the State of California to cause cancer, birth defects or other reproductive harm. For more information go to www.P65Warnings.ca.gov.

WARNING

Do not leave the fryer unattended during use.

WARNING

Use caution when dropping wet food or water into the hot oil. It may cause spattering of the oil, which may cause severe burns

WARNING

Do not overfill the frypot to avoid overflow of hot oil that may cause severe burns, slipping and falling.

WARNING

Use caution and wear appropriate safety equipment when adding oil to the fryer, to prevent splashing of hot oil, which may cause severe burns.

GF14 and GF40 SERIES GAS FRYERS
TABLE OF CONTENTS

CHAPTER 1: General Information
1.1 Parts Ordering and Service Information 1-1
1.2 Safety Information 1-2
1.3 Equipment Description 1-2
1.4 Installation, Operating, and Service Personnel 1-3
1.5 Definitions 1-3
1.6 Shipping Damage Claim Procedure 1-4

CHAPTER 2: Installation Instructions
2.1 General Installation Requirements 2-1
2.2 Caster/Leg Installation 2-3
2.3 Pre-Connection Preparations 2-3
2.4 Connection to Gas Line 2-4
2.5 Converting to Another Gas Type 2-6

CHAPTER 3: Operating Instructions
3.1 Start-Up Procedures 3-1
3.2 Boiling Out the Frypot 3-2
3.3 Filling with Cooking Oil or Shortening 3-3
3.4 Shutting the Fryer Down 3-3
3.5 Thermostat Operation 3-3
3.6 Draining and Filtering 3-4

CHAPTER 4: Preventive Maintenance and Operator Troubleshooting
4.1 Daily Checks and Services 4-1
4.2 Quarterly Checks and Services 4-1
4.3 Semi-Annual Checks and Services 4-2
4.4 Operator Troubleshooting 4-4

GF14 and GF40 SERIES GAS FRYERS
CHAPTER 1: GENERAL INFORMATION

1.1 Parts Ordering and Service Information

In order to assist you, the Frymaster Factory Authorized Servicer (FAS) or Service Department representative requires certain information about your equipment. Most of this information is printed on a data plate inside the fryer door. A typical data plate is illustrated below.

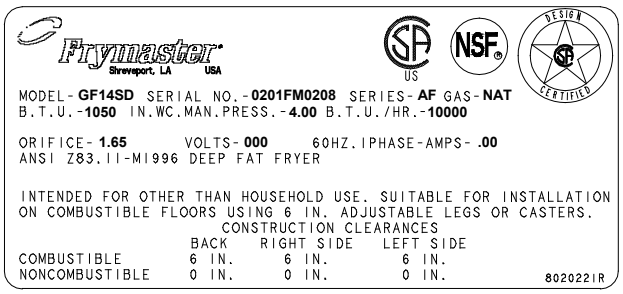

Parts orders must be placed with your local FAS or distributor. A list of Frymaster Factory Authorized Servicers (FAS's) is located on the Frymaster website at www.frymaster.com. If you do not have access to this list, contact the Frymaster Technical Service Department at 1-800-551-8633 or 1-318-865-1711.

When ordering parts, the following information is required:

Model Number: _____
Serial Number: _____
Type of Gas: _____
Item Part Number: _____
Quantity Needed: _____

Service information may be obtained by contacting your local FAS. Information may also be obtained by calling the Frymaster Technical Service Department at 1-800-551-8633 or 1-318-865-1711.

When requesting service, please have the following information ready:

Model Number: _____
Serial Number: _____
Type of Gas: _____

In addition to the model number, serial number, and type of gas, please be prepared to describe the nature of the problem.

RETAIN AND STORE THIS MANUAL IN A SAFE PLACE FOR FUTURE USE.

1.2 Safety Information

Before attempting to operate your unit, read the instructions in this manual thoroughly.

Throughout this manual, you will find notations enclosed in double-bordered boxes similar to the ones below.

⚠ CAUTION

Caution boxes contain information about actions or conditions that may cause or result in a malfunction of your system.

⚠ WARNING

Warning boxes contain information about actions or conditions that may cause or result in damage to your system, and which may cause your system to malfunction.

DANGER boxes contain information about actions or conditions that ***may cause or result in injury to personnel***, and which may cause damage to your system and/or cause your system to malfunction.

⚠ DANGER

Danger boxes contain information about actions or conditions that may cause or result in injury to personnel, and which may cause damage to your system and/or cause your system to malfunction.

1.3 Equipment Description

The GF14 and GF40 Series gas fryers are designed for all-purpose frying. Other than the capacity of the frypot, both fryers are virtually identical. The GF14 model holds up to 40 lbs. (20 liters) of cooking oil or shortening. GF40 fryers hold up to 50 lbs. (25 liters). Both models must be manually filtered or filtered with a portable filtration unit such as the Frymaster PF50 portable filter.

These fryers use a millivolt temperature control circuit, which requires no external power.

Both models use an open-pot design and have a hand-sized opening into the deep cold zone, which makes cleaning the frypot quick and easy.

The fryers require installation of legs or optional casters. All fryers are shipped with a package of standard accessories. Each fryer is adjusted, tested, and inspected at the factory before crating for shipment.

Frypots are constructed of welded, heavy-gauge stainless steel. Heat is supplied by a burner assembly with multiple gas jets, which are focused on deflectors located around the lower side of the frypot. The deflectors concentrate the burners' heat on the bottom of the frypot.

The burner assembly can be configured for natural gas, propane, or manufactured gas, as required by the customer. A drain is tapped into the center of the frypot, with a front-controlled manual ball valve.

Each fryer is equipped with a thermostat for temperature control. The thermostat is located near the centerline of the frypot for responsiveness and accurate temperature measurement.

A high temperature thermostat (hi-limit) shuts off gas to the burner assembly if the controlling thermostat fails.

1.4 Installation, Operating, and Service Personnel

Operating information for Frymaster equipment has been prepared for use by qualified and/or authorized personnel only, as defined in Section 1.5.

All installation and service on Frymaster equipment must be performed by qualified, certified, licensed, and or/authorized installation or service personnel, as defined in Section 1.5.

1.5 Definitions

QUALIFIED AND/OR AUTHORIZED OPERATING PERSONNEL

Qualified/authorized operating personnel are those who have carefully read the information in this manual and have familiarized themselves with the equipment functions, or who have had previous experience with the operation of the equipment covered in this manual.

QUALIFIED INSTALLATION PERSONNEL

Qualified installation personnel are individuals, or firms, corporations, or companies which, either in person or through a representative, are engaged in and are responsible for the installation of gas-fired appliances. Qualified personnel must be experienced in such work, be familiar with all gas precautions involved, and have complied with all requirements of applicable national and local codes.

QUALIFIED SERVICE PERSONNEL

Qualified service personnel are those familiar with Frymaster equipment and authorized by Frymaster to perform service on Frymaster equipment. All authorized service personnel are required to be equipped with a complete set of service and parts manuals and stock a prescribed minimum amount of Frymaster equipment parts.

A list of Frymaster Factory Authorized Servicers (FAS's) is located on the Frymaster website at www.frymaster.com. ***Failure to use qualified service personnel will void the Frymaster Warranty on your equipment.***

1.6 Shipping Damage Claim Procedure

Your Frymaster equipment was inspected and packed before leaving the factory. The transportation company assumes full responsibility for safe delivery upon acceptance of the equipment for transport.

What to do if your equipment arrives damaged:

1. **File a claim for damages immediately**, regardless of the extent of damages.

2. **Inspect for and record all visible loss or damage**, and ensure that this information is noted on the freight bill or express receipt and is signed by the person making the delivery.

3. **Concealed loss or damage** that was unnoticed until the equipment was unpacked should be recorded and reported to the freight company or carrier **immediately** upon discovery. A concealed damage claim must be submitted within 5 days of the date of delivery. Ensure that the shipping container is retained for inspection.

Frymaster **DOES NOT ASSUME RESPONSIBILITY FOR DAMAGE OR LOSS INCURRED IN TRANSIT.**

GF14 and GF40 SERIES GAS FRYERS
CHAPTER 2: INSTALLATION INSTRUCTIONS

2.1 General Installation Requirements

PROPER INSTALLATION IN ACCORDANCE WITH THE INSTRUCTIONS THAT FOLLOW IS ESSENTIAL FOR EFFICIENT, TROUBLE-FREE OPERATION OF YOUR FRYER. ANY UNAUTHORIZED ALTERATIONS MADE TO THIS EQUIPMENT WILL VOID THE FRYMASTER WARRANTY.

Qualified, licensed, and/or authorized installation or service personnel, as defined in Section 1.5 of this manual, should perform all installation and service on Frymaster equipment.

Conversion of this appliance from one type of gas to another should only be performed by qualified, licensed, and/or authorized installation or service personnel as defined in Section 1.5 of this manual.

Failure to use qualified, licensed, and/or authorized installation or service personnel (as defined in Section 1.5 of this manual) to install, convert to another gas type or otherwise service this equipment will void the Frymaster warranty and may result in damage to the equipment or injury to personnel.

Where conflicts exist between instructions and information in this manual and local or national codes or regulations, installation and operation shall comply with the codes or regulations in force in the country in which the equipment is installed.

⚠ DANGER
Building codes prohibit a fryer with its open tank of hot oil being installed beside an open flame of any type, including those of broilers and ranges.

Upon arrival, inspect the fryer carefully for visible or concealed damage. (See **Shipping Damage Claim Procedure** in Chapter 1.)

CLEARANCE AND VENTILATION

The fryer(s) must be installed with a 6” (150 mm) clearance at both sides and back when installed adjacent to combustible construction; no clearance is required when installed adjacent to noncombustible construction. A minimum of 24” (600 mm) clearance should be provided at the front of the fryer.

⚠ DANGER
No structural material on the fryer should be altered or removed to accommodate placement of the fryer under a hood. Questions? Call the Frymaster/Dean Service Hotline at 1-800-551-8633.

Ventilation is important. Make sure the fryer is installed to efficiently remove combustion by-products, and the kitchen ventilation system does not produce drafts, which interfere with burner operation.

The fryer flue opening must not be placed close to the intake of the exhaust fan, and the fryer must never have its flue extended in a "chimney" fashion. An extended flue changes the combustion characteristics of the fryer, causing longer recovery time. It also frequently causes delayed ignition. To provide the airflow necessary for good combustion, the areas surrounding the fryer front, sides, and rear must be kept unobstructed.

⚠ DANGER

This appliance must be installed with sufficient ventilation to prevent the occurrence of unacceptable concentrations of substances harmful to the health of personnel in the room in which it is installed.

Fryers must be installed in an area with an adequate air supply and adequate ventilation. Adequate distances must be maintained from the flue outlet of the fryer to the lower edge of the ventilation filter bank. Filters should be installed at an angle of 45º. Place a drip tray beneath the lowest edge of the filter. For U.S. installation, NFPA standard No. 96 states, "A minimum distance of 18 in. (450 mm) should be maintained between the flue outlet and the lower edge of the grease filter." *Frymaster recommends that the minimum distance be 24 in. (600 mm) from the flue outlet to the bottom edge of the filter*.

Information on construction and installation of ventilating hoods can be found in the NFPA standard cited above. A copy of the standard may be obtained from the National Fire Protection Association, Battery March Park, Quincy, MA 02269.

NATIONAL CODE REQUIREMENTS

The fryer's gas type is on the data plate inside the fryer door. Connect a fryer marked "NAT" only to natural gas, those marked "PRO" only to propane gas, and those marked "MFG" only to manufactured gas.

Installations in the UNITED STATES must conform to the latest edition of the National Fuel Gas Code, ANSI Z223.1. In CANADA, installation must conform to the latest edition of Standard CAN-/GCA-B149.1 or .2, "Installation Codes for Gas Burning Appliances & Equipment". In addition to the applicable national code or standard, installation must also be in accordance with any local codes for the area in which the equipment is installed.

In AUSTRALIA, this appliance must be installed by an authorized person, in accordance with the manufacture's instructions, local gas regulations, and in accordance with AS 5601 / AG 601, local authority, gas, electricity, and any other relevant statutory regulations.

Installation must be made with a gas connector that complies with national and local codes. In the UNITED STATES, the applicable code is ANSI Z21.69 with Addenda, "Standard for Connectors for Movable Gas Appliances". Quick-Disconnect devices, if used, must comply with national and local codes. In the UNITED STATES, the code is ANSI Z21.41, "Standard for Quick-Disconnect Devices for Use with Gas Fuel".

SOUTH AFRICA REQUIREMENTS

IMPORTANT INFORMATION FOR THE USER
This appliance may only be installed by a registered SAQCC Gas installer. All registered installers are issued with a card carrying their registration number. Ask to be shown the card before allowing the installation work to commence and make a note of the Installer registration number. Upon

completion of the installation, the installer is required to explain the operational details of the appliance together with the safety instructions. You will be asked to sign acceptance of the installation and be provided with a completion certificate. You should only sign for acceptance of the installation when the installation is completed to your satisfaction.
Note that your invoice is required in the event that you wish make a guarantee claim.

IMPORTANT INFORMATION FOR THE INSTALLER.
This appliance may only be installed by a gas installer registered with the South African qualification and certification committee (SAQCC). The appliance must be installed in accordance with the requirements of SANS 10087-1for use with LPG, SANS 827 for use with NG and any fire department regulations and/or local bylaws applicable to the area. If in doubt, check with the relevant authority before undertaking the installation. Upon completion of the installation you are required to fully explain and demonstrate to the user the operational details and safety practices applicable to the appliance and the installation.

2.2 Caster/Leg Installation

Your fryer may have shipped without installed casters or legs. Fryers must have casters or legs. **DO NOT INSTALL THIS APPLIANCE WITHOUT CASTERS OR LEGS. If the appliance requires the installation of casters or legs, install them in accordance with the instructions included in your accessory package.** If casters or legs are installed, you may skip this section and proceed to Section 2.3, Pre-Connection Preparations. **Fryers cannot be curb mounted.**

⚠ DANGER
Frymaster appliances equipped with legs are for stationary installations. Appliances fitted with legs must be lifted during movement to avoid damage to the appliance and bodily injury. For movable installations, optional equipment casters must be used. Questions? Call 1-800-551-8633.

2.3 Pre-Connection Preparations

⚠ DANGER
Do not connect fryer to gas supply before completing each step in this section.

After the fryer is positioned under the exhaust hood, check the following:

1. Adequate means must be provided to limit the movement of fryers without depending upon the gas line connections. If a flexible gas hose is used, a restraining cable must be connected at all times when the fryer is in use. The restraining cable and installation instructions are packed with the flexible hose in the accessories box shipped with your unit.

2. These fryers must be stabilized by installing restraining chains on fryers equipped with casters or anchor straps on fryers equipped with legs. Follow the instructions shipped with the casters/legs to properly install the chains or straps.

⚠ DANGER

Do not attach an apron drainboard to a single fryer. The fryer may become unstable, tip over, and cause injury. The appliance area must be kept free and clear of combustible material at all times.

3. Level fryers equipped with legs by extending the adjustable portion of the leg out approximately 1 inch, and then further adjust the legs, ensuring the fryer is level and at the proper height in the exhaust hood. Frymaster recommends that the minimum distance from the flue outlet to the bottom edge of the filter be 24 in. (600 mm).

   For fryers equipped with casters, there are no built-in leveling devices. The floor where the fryer is to be installed must be level.

4. Refer to the data plate on the inside of the fryer door to verify that the fryer is configured for the proper type of gas before connecting the fryer quick-disconnect device or piping from the gas supply line.

5. Verify that the minimum and maximum gas supply pressures for the type of gas to be used are in accordance with the table below.

Standard for Incoming Gas Pressure		
Gas	**Minimum**	**Maximum**
Natural	6” WC 1.49 kPa 14.94 mbar	14” WC 3.49 kPa 34.87 mbar
LP	11” WC 2.74 kPa 27.37 mbar	14” WC 3.49 kPa 34.87 mbar

⚠ WARNING

If the incoming gas pressure is in excess of ½" PSI (3.45 kPa/35 mbar), <u>a step-down regulator will be required</u>.

SOUTH AFRICA REQUIREMENT (LPG FRYERS ONLY)

This appliance requires an operating pressure of 2,8 kPa at the appliance. A suitable LPG regulator that complies with the requirements of SANS 1237 must be installed.

2.4 Connection to Gas Line

⚠ DANGER

Before connecting new pipe to this appliance, the pipe must be blown out thoroughly to remove all foreign material. Foreign material in the burner and gas controls will cause improper and dangerous operation.

⚠ DANGER

When pressure-testing incoming gas supply lines, disconnect the fryer from the gas line if the test pressure will be ½ PSIG (3.45 kPa, 13.84 inches W.C.) or greater to avoid damage to the fryer’s gas tubes and gas valve(s).

The size of the gas line used for installation is important. If the line is too small, the gas pressure at the burner manifold will be low. This will cause pilot outage, slow recovery and delayed ignition. The incoming gas supply line should be a minimum of 1½" (38 mm) in diameter. All single GF14/GF40 fryers using natural gas require a ¾" connection. Batteries of two and three fryers require a 1" connection. For fryers using LP gas, one pipe size smaller may be used. If in doubt about the correct pipe size, consult the local gas company.

NOTE: Runs of more than 20 feet and more than 4 fittings or elbows require an increase of one pipe size, i.e., ¾" to 1" or 1" to 1¼".

Before connecting new pipe to your unit, the pipe must be thoroughly blown out to remove any foreign particles, which can cause improper and sometimes dangerous operation.

1. Connect the quick-disconnect hose to the fryer quick-disconnect fitting at the rear of the fryer and to the building gas line.

   NOTE: Some fryers are configured for a rigid connection to the gas supply line. These units are connected directly to the gas supply line.

   When using thread compound, use very small amounts on male threads only. Use a pipe thread compound that is not affected by the chemical action of LP gases (Loctite™ PST56765 Sealant is one such compound). DO NOT apply compound to the first two threads. This will ensure that the burner orifices and control valve do not become clogged.

2. Open the gas supply to the fryer and check all piping, fittings, and gas connections for leaks. A soap and water solution should be used for this purpose.

⚠ DANGER

All connections must be sealed with a joint compound suitable for the gas being used and all connections must be tested with a solution of soapy water before lighting any pilots.

⚠ DANGER

Never use matches, candles, or any other ignition source to check for leaks. If gas odors are detected:

- **Shut off the gas supply to the appliance at the main shut-off valve or bottle.**
- **Extinguish all naked flames.**
- **Do not operate any electrical appliances in the area.**
- **Ventilate the area.**
- **Check for leaks as detailed in this manual using a solution of soapy solution.**
- **Immediately contact the local gas company or an authorized service agency for service.**

If odor persists, contact the dealer or gas supplier immediately.

NOTE: The fryer must be disconnected from the gas supply piping during any pressure testing of the gas supply piping at pressures equal to or greater than ½ psig (3.45kPa or 13.84 in. W.C.).

3. Close the fryer drain valve and fill the frypot with water or boil-out solution to the bottom OIL-LEVEL line at the rear of the frypot. Light the fryer and perform the boil-out procedures that are described in the "Start-Up Procedure" and "Boiling Out the Frypot" topics found in Chapter 3.

⚠ WARNING

"Dry-firing" your unit will cause damage to the frypot. Always ensure that melted shortening, cooking oil, or water is in the frypot before firing your unit.

⚠ DANGER

In the event of a burn-back, where the flame burns back to the jet, immediately turn the gas supply off at the control valve on the panel. After ensuring the flame is extinguished, wait for I minute and re-light the appliance in the normal manner. Should the appliance again burn back, close the control valve and call a service technician. Do not use the appliance again until the service technician has declared that it is safe to do so.

4. The burner manifold pressure be checked at this time by the local gas company or an authorized service agent. Refer to "Check Burner Manifold Pressure" in Section 4.3 of this manual for the proper procedure.

5. Check the thermostat calibration in accordance with the instructions in Section 4.3 of this manual.

2.5 Converting to Another Gas Type

⚠ DANGER

This appliance was configured at the factory for a specific type of gas. Converting from one type of gas to another requires the installation of specific gas-conversion components.

Switching to a different type of gas without installing the proper conversion components may result in fire or explosion. NEVER ATTACH THIS APPLIANCE TO A GAS SUPPLY FOR WHICH IT IS NOT CONFIGURED!

Conversion of this appliance from one type of gas to another should only be performed by qualified, licensed, and authorized installation or service personnel, as defined in Section 1.5 of this manual.

Your fryer is configured at the factory for either natural gas or Propane (LP) gas. ***If you desire to switch from one type of gas to another, a Factory Authorized Servicer technician must install a gas conversion kit.***

Call Frymaster Service (1-800-551-8633) to determine the conversion kit appropriate for your configuration and altitude. Contact your local FAS to order the kit and arrange for installation.

GF14 and GF40 SERIES GAS FRYERS
CHAPTER 3: OPERATING INSTRUCTIONS

3.1 Start-Up Procedure

⚠ CAUTION
If this is the first time the fryer is being used after installation, refer to Section 3.2, Boil-Out Procedure.

⚠ CAUTION
The cooking oil/shortening capacity of the GF14 Series fryer is 40 lbs. (20 liters) at 70ºF (21ºC).

The cooking oil/shortening capacity of the GF40 Series fryer is 50 lbs. (25 liters) at 70°F (21°C).

Before lighting the fryer, make sure the fryer is OFF and the frypot drain valve is closed. Remove the basket support rack, if installed, and fill the frypot to the bottom OIL-LEVEL line.

To prevent scorching, if solid shortening is being used, make sure it is tightly packed down into the bottom of the frypot.

Operating the Gas Valve:

The knob on the Honeywell gas valve is placed in the PILOT or ON position by rotating it counter-clockwise. To return the knob to the OFF position, the knob must be depressed slightly to disengage its stop tab, then rotated clockwise.

Lighting the Pilot and Burner:

⚠ WARNING
Frypot must be filled with water or cooking oil/shortening before lighting.

1. Open the door and turn the thermostat knob to the desired frying temperature (or 275°F/135°C if boiling out the frypot).

2. Rotate the gas valve knob to the PILOT position (see Figure 1).

Lighting the Pilot and Burner

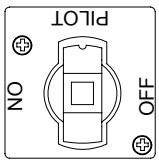

Figure 1

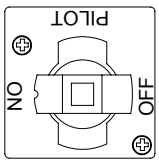

Figure 2

3. Push the knob in and light the pilot. Continue to hold the knob in for about 60 seconds after the flame appears on the pilot. Release the knob. The pilot should remain lit.

⚠ CAUTION
If the pilot fails to remain lit, wait five minutes before attempting to re-light.

4. With the pilot lit, push down and slowly turn the knob to the ON position (see Figure 2 on Page 3-1).

5. The burner should light and burn with a strong blue flame. Once the burner is lit, it is controlled by the thermostat.

⚠ CAUTION
If the pilot and main burner go out, the fryer(s) must be completely shut down at least five minutes before re-lighting.

3.2 Boiling Out the Frypot

To ensure that the frypot is free of any contamination resulting from its manufacture, shipping, and handling during installation, the frypot must be boiled out before first use. Frymaster recommends boiling out the frypot each time the oil or shortening is changed.

1. Before lighting the burner, close the frypot drain valve and fill the frypot with a mixture of cold water and boil-out solution or detergent. Fill to the lower oil-level line.

2. Light the fryer in accordance with the lighting instructions in Section 3.1.

3. Simmer the solution for one hour.

⚠ DANGER
Never leave the fryer unattended during the boil-out process. If the boil-out solution boils over, turn the fryer off immediately and let the solution cool for a few minutes before resuming the process. To lessen the chance of boil over, turn the fryer's gas valve knob to the PILOT position occasionally.

4. After the solution has simmered for one hour, turn the gas valve knob to the PILOT position and allow the solution to cool.

5. Add one gallon (3.8 liters) of cold water and stir. Drain the solution into a suitable container and clean the frypot thoroughly.

⚠ WARNING
Do not drain boil-out solution into a shortening disposal unit or portable filter unit. These units are not intended for this purpose, and will be damaged by the solution.

6. Rinse the frypot at least twice by filling the frypot with clean water and draining. Dry the frypot thoroughly with a clean, dry towel.

⚠ DANGER
Remove all drops of water from the frypot before filling with cooking oil or shortening. Failure to do so may cause spattering of hot liquid when the oil or shortening is heated to cooking temperature.

3.3 Filling With Cooking Oil or Shortening

The GF14 Series fryer holds a minimum of 30 lbs. (15 liters) and a maximum of 40 lbs. (20 liters) of cooking oil or shortening at 70°F (21°C).

The GF40 Series fryer holds a minimum of 40 lbs. (20 liters) and a maximum of 50 lbs. (25 liters) of cooking oil or shortening at 70°F (21°C).

1. Ensure the fryer's gas valve is off or in the pilot position.

2. Close the frypot drain valve; remove the basket support rack if required.

3. Fill the frypot to the lower oil-level line. **When solid shortening is used, it must be thoroughly packed down into the frypot's cold zone.**

4. To melt solid shortening without scorching, the gas valve knob should be turned to the ON position for about three seconds and then to the PILOT position for about 10 seconds repeatedly until the shortening is completely melted. If any smoke is seen during this process, the oil is heating too quickly and scorching. This melting process is not necessary with liquid shortening.

3.4 Shutting the Fryer Down

For short-term shut down during the workday, rotate the gas valve knob clockwise to the PILOT position (see Figure 1 on Page 3-1) and put the frypot covers in place (if the fryer is so equipped).

When shutting the fryers down, rotate the gas valve knob to the PILOT position (see Figure 1 on Page 3-1). Depress the gas valve knob and rotate slightly clockwise. Release and continue rotating clockwise to the OFF position (see Figure 2 on Page 3-1). Put the frypot covers in place (if the fryer is so equipped).

3.5 Thermostat Operation

The thermostat on GF14/GF40 fryers is connected to a graduated knob located inside the fryer door. On GF14 models, the knob is on the left side; in GF40 models, the knob is on the right side. Rotating the knob clockwise to the desired cooking temperature (setpoint) directly adjusts the thermostat to that temperature. The thermostat controls the frypot temperature by regulating the gas supply to the burner via the gas valve.

The thermostat is in the full OFF position when the word OFF is at the top of the knob. A "click" will be heard when the knob is rotated from the OFF position to a temperature, or when it is rotated back to the OFF position.

The thermostat may require calibration from time to time. To determine if it requires calibration, refer to Check Thermostat Calibration in Section 4.2 of this manual.

3.6 Draining and Filtering

⚠ DANGER
Draining and filtering of cooking oil or shortening must be accomplished with care to avoid the possibility of a serious burn caused by careless handling. Frymaster recommends that elbow-length, heat-resistant rubber gloves be worn when draining or filtering cooking oil or shortening.

Cooking oil or shortening should be filtered at least twice daily and more often if a heavy volume of breaded product is fried. Filtering will greatly increase the life of the cooking oil or shortening and will produce a higher quality product. Frymaster recommends the use of the Frymaster PF50 Portable Filter.

NOTE: When using a portable filtration unit, refer to the unit manufacturer's operating instructions for the proper filtering procedures.

The following procedure is recommended to drain and filter your cooking oil or shortening when a portable filtration unit is not available.

⚠ DANGER
NEVER attempt to drain cooking oil or shortening from the fryer with the burner lit! Doing so may result in a flash fire if the oil or shortening splashes onto the burner. Also, applying burner heat to an empty frypot will severely damage the frypot and void the Frymaster warranty.

1. Rotate the gas valve knob to the PILOT or OFF position. Screw the drain extension supplied with the fryer securely into the drain valve, making sure the opening is pointing down (see illustration below).

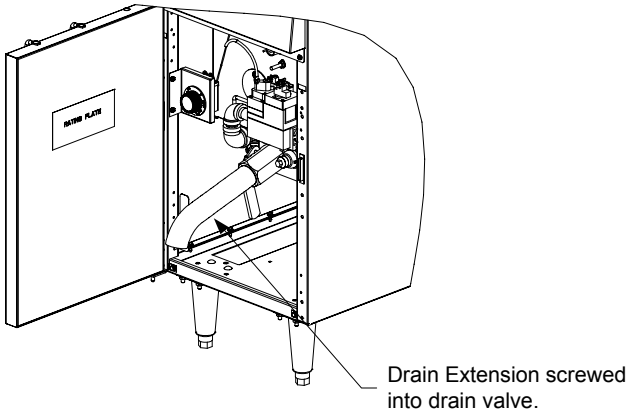

NOTE: If draining the fryer to dispose of the oil, Frymaster recommends the use of a wheeled disposal unit equipped with a pump, such as the Frymaster SDU 50. When using a disposal unit, follow the unit manufacturer's instructions.

2. Position a metal container with a sealable cover under the drain extension. The metal container must be capable of withstanding the hot cooking oil or shortening without leaking. Frymaster recommends that a Frymaster filter cone holder and filter cone be used when a portable filtration unit is not available. If you are using a Frymaster filter cone holder and filter cone, be sure that the cone holder rests securely on the metal container.

3. Open the drain valve slowly to avoid splattering.

4. If the drain valve becomes clogged with food particles, use a cleanout rod, available from Frymaster, to clear the valve by inserting it into the drain opening from the INSIDE of the frypot.

⚠ DANGER

NEVER attempt to clear a clogged valve from the front of the valve! Hot oil or shortening will rush out creating the potential for severe burns.

DO NOT hammer on the drain valve with the rod or other objects. Damage to the ball inside will result in leaks and will void the Frymaster warranty.

5. The drained shortening should be allowed to cool to 100°F (38°C) or lower before transporting the container and removing the drain extension. Cooking oil or shortening at a temperature of 140°F (60°C) or higher will result in severe burns if it comes in contact with your skin.

6. After draining the cooking oil or shortening, clean all food particles and residual oil/shortening from the frypot before refilling. Be careful! The residual oil/shortening remains hot enough to cause severe burns if it comes in contact with your skin.

7. Close the drain valve and refill the frypot with clean, filtered cooking oil or shortening to the lower oil level line.

GF14 and GF40 SERIES GAS FRYERS
CHAPTER 4: PREVENTIVE MAINTENANCE AND OPERATOR TROUBLESHOOTING

4.1 Daily Checks and Services

Inspect Fryer and Accessories for Damage

Look for loose or frayed wires, leaks, foreign material in frypot or inside cabinet, and any other indications that the fryer and accessories are not ready and safe for operation.

Inspect the burner deflectors or targets to verify that each is positioned directly above its orifice, and that the flame ignites approximately 2½ inches (60mm) above the orifice. The flame should strike the center of the deflector and be a rich blue color. Call your Factory Authorized Servicer (FAS) if you see any problems.

Clean Fryer Cabinet Inside and Out

Clean inside the fryer cabinet with dry, clean cloth. Wipe all accessible metal surfaces and components to remove accumulations of oil or shortening and dust.

Clean the outside of the fryer cabinet with a clean, damp cloth soaked with dishwashing detergent, removing oil/shortening, dust, and lint from the fryer cabinet.

⚠ DANGER
Never attempt to clean the fryer during the cooking process or when the frypot is filled with hot oil/shortening. If water comes in contact with oil/shortening heated to cooking temperature, it can cause the oil/shortening to splatter and severely burn nearby personnel.

Filter Cooking Oil/Shortening

The cooking oil/shortening used in your fryer should be filtered at least twice every day (more often if the fryer is in constant use). Refer to Section 3.6, "Draining and Filtering", for details.

4.2 Quarterly Checks and Services

Drain and Clean Frypot

During normal usage of your fryer, a deposit of carbonized cooking oil or shortening will gradually form on the inside of the frypot. This deposit must be periodically removed to maintain your fryer's efficiency.

Follow the procedures for draining the frypot in Section 3.6, the follow the "Boiling Out the Frypot" procedures in Section 3.2.

Clean Detachable Parts and Accessories

As with the frypot, a deposit of carbonized oil/shortening will accumulate on detachable parts and accessories such as baskets and sediment trays.

Wipe all detachable parts and accessories with a clean cloth dampened with a detergent solution recommended by your distributor. Rinse and thoroughly dry each part.

Check Thermostat

1. Set the temperature control knob to 375°F (191°C), i.e., fully clockwise.
2. Let the burner cycle on and off automatically three times in order for the oil temperature to become uniform. If necessary, stir to get all shortening in the bottom of the frypot melted.
3. Insert a good-grade thermometer or pyrometer into the oil, with the end near the fryer temperature-sensing probe, which is welded to the frypot. In GF14 fryers, the probe is on the left side of the frypot; in GF40 models, it is on the right side.
4. When the burner starts for the fourth time, the thermometer/pyrometer reading should be within the range 355-385°F (185-196°C). **The tolerance band of the Sunne thermostat is +10°F (+6°C) and -20°F (-11°C).**

Clean Gas Valve Vent Tube

1. Carefully unscrew the vent tube from the gas valve. **NOTE:** The vent tube may be straightened for ease in removal.
2. Pass a piece of ordinary binding wire (.052 inch diameter) through the tube to remove any obstruction.
3. Remove the wire and blow through the tube to ensure it is clear.
4. Reinstall tube and bend it so that the opening is pointing downward.

4.3 Semi-Annual Checks and Service

Check Burner Manifold Pressure

⚠ WARNING
This task should be performed by qualified service personnel only.

⚠ WARNING
The frypot must be filled with water or cooking oil/shortening during this procedure.

1. Ensure that the gas valve knob is in the OFF position.
2. Remove the pressure tap plug from burner manifold.

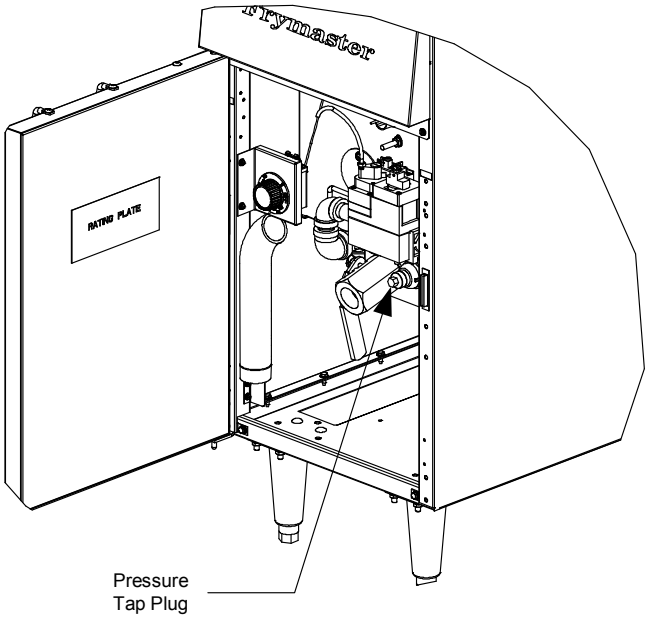

3. Insert the fitting for a manometer or pressure gauge into the pressure tap hole.

4. Place the gas valve in the PILOT position and light the pilot. When the pilot lights and continues to burn, increase the setting on the thermostat knob until the burner lights. Compare the manometer or gauge reading to the appropriate table below.

GF14 Standard for Burner Manifold Pressure	
Gas Type	Pressure
Natural	4.0” WC (1.00 kPa or 9.96 mbar)
LP	10.0” W.C (2.49 kPa or 24.91 mbar)

GF40 Standard for Burner Manifold Pressure	
Gas Type	Pressure
Natural	3.0” WC (0.75 kPa or 7.50 mbar)
LP	8.25” W.C. (2.06 kPa or 20.55 mbar)

5. If the burner manifold pressure does not meet the specifications in the tables in Step 4, unscrew the slotted cap from the top of the gas valve regulator (adjacent to the gas valve vent tube) and turn the adjusting screw to obtain the correct pressure. Turn the screw clockwise to increase pressure, counter-clockwise to decrease pressure.

6. After adjusting the manifold pressure to the correct value, reinstall the regulator cap and turn the gas valve knob to the OFF position.

7. Remove the manometer or pressure gauge fitting from the pressure tap hole and reinstall the pipe plug.

8. Place the gas valve in the PILOT position and check for gas leaks. If no leaks are found, re-light the pilot and return the unit to operation.

4.4 Operator Troubleshooting

The tables that follow provide operators with a list of possible malfunctions, the probable causes of the malfunctions, and the corrective actions to take to correct the problem.

In some cases the operator may not be able to correct the problem, but will at least be able to accurately diagnose the problem, and that will assist a qualified service technician in restoring the equipment to full operation in the shortest possible time.

Problem	Probable Cause	Corrective Action
Burner does not light at all.	A. Pilot is not lit.	A. Light pilot.
	B. Loose, dirty, or corroded terminals on gas valve.	B. Clean and tighten terminals on gas valve.
	C. Loose, dirty, or corroded terminals on thermostat.	C. Clean and tighten terminals on thermostat.
	D. Thermostat, gas valve, or hi-limit wires broken or shorted.	D. Examine wires for signs of abrasions, cuts, kinks, etc. If the wiring is obviously damaged, it will probably be necessary to replace the associated component. Call FAS.
	E. Thermostat out of tolerance.	E. Check thermostat in accordance with procedures in Section 4.2 of this manual.
	F. If the above causes have all been ruled out, the probable causes are a failed thermostat or a failed gas valve.	F. Call FAS.
Burner does not light all the way around.	A. One or more burner orifices clogged.	A. Turn gas valve knob to OFF position. Use thin wire to clear obstruction from burner orifices.
	B. Blocked flue.	B. Clear blockage from flue.
	C. Fryer flue connected directly to vent hood with a chimney-like duct.	C. Remove chimney-like duct and allow for at least 18” (45.7cm) between flue outlet and vent hood filters.
	D. If the above causes have all been ruled out, the probable causes are a bent or missing flame deflector or incorrect burner gas pressure.	D. Call FAS.

Problem	Probable Cause	Corrective Action
Burner experiences delayed ignition.	A. Too little make-up air in kitchen.	A. Adjust kitchen ventilation system to increase make-up air.
	B. Pilot flame directed away from first orifice of burner.	B. Reposition pilot hood to direct flame toward first burner orifice.
	C. One or more burner orifices clogged.	C. Use a thin wire to clear obstruction from orifices.
	D. If the above causes have all been ruled out, the probable causes are low pilot flame (less than 1" (25mm)), low incoming gas pressure, or a too small incoming gas line.	D. Call FAS
Flame rolling out from under fryer.	A. Flue obstructed.	A. Remove obstruction from flue.
	B. Too little make-up air in kitchen.	B. Adjust kitchen ventilation system to increase make-up air.
Pilot repeatedly goes out.	A. Clogged pilot orifice.	A. Use a small wire to clear obstruction from pilot orifice.
	B. Pilot flame blowing away from pilot generator (excessive draft in kitchen).	B. Eliminate draft in kitchen.
	C. Pilot generator not inserted fully into pilot burner.	C. Reinsert pilot generator into pilot burner until flame surrounds tip.
	D. Corroded connection where pilot generator connects to gas valve.	D. Clean pilot generator connection at gas valve.
	E. If all of the above causes have been ruled out, the probable causes are low pilot flame, pilot generator low millivolt output, high resistance in hi-limit thermostat contacts, or a defective pilot magnet in the gas valve.	E. Call FAS.

Problem	Probable Cause	Corrective Action
Pilot remains lit when gas valve knob is pushed in, but goes out when released.	A. Loose, dirty or corroded hi-limit wires.	A. Clean/tighten hi-limit wires on gas valve.
	B. If the above does not correct the problem, the probable causes are a weak gas valve pilot magnet, pilot generator low millivolt output, or a high-limit thermostat stuck open.	B. Call FAS.
Thermostat does not control at set point.*	A. Failed thermostat.	A. Call FAS.

***NOTE:** The tolerance band of the Sunne thermostat is +20°F (+6°C) and -20°F (-11°C).

THIS PAGE INTENTIONALLY LEFT BLANK

Welbilt (China) Foodservice Co., Ltd
151 Jianye Road Binjian District
Hangzhou, Zhejiang, 310052 China

800-551-8633
318-865-1711
WWW.FRYMASTER.COM
EMAIL: FRYSERVICE@FRYMASTER.COM

©2026 Frymaster LLC. except where explicitly stated otherwise. All rights reserved. Continuing product improvement may necessitate change of specifications without notice.

Part Number DEA_IOM_8195887H 04/2026